TEK

OPERATOR'S MANUAL
070-6738-00

CFG250
FUNCTION GENERATOR

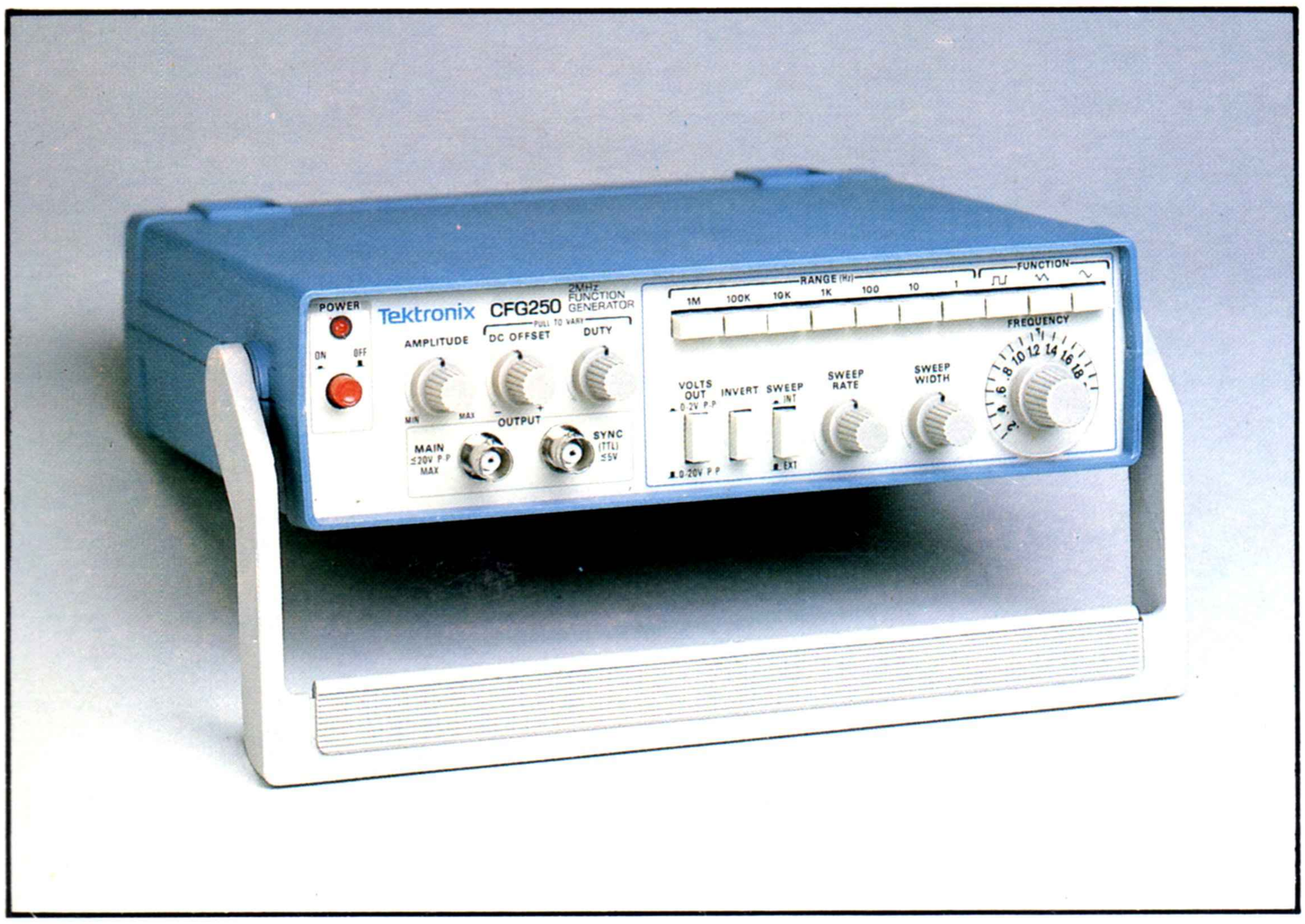

Tektronix®
COMMITTED TO EXCELLENCE

TEK

070-6738-00
PRODUCT GROUP 46

CFG250 FUNCTION GENERATOR

OPERATOR'S MANUAL

Please Check for CHANGE INFORMATION at the Rear of This Manual

First Printing November 1987

Tektronix®
COMMITTED TO EXCELLENCE

Copyright © 1987 Tektronix, Inc. All rights reserved. Contents of this publication may not be reproduced in any form without the written permission of Tektronix, Inc.

Products of Tektronix, Inc. and its subsidiaries are covered by U.S. and foreign patents issued and pending.

TEKTRONIX, TEK, SCOPE-MOBILE, and are registered trademarks of Tektronix, Inc.

Printed in Hong Kong. Specification and price change privileges are reserved.

INSTRUMENT SERIAL NUMBERS

Each instrument has a serial number on a panel insert, tag, or stamped on the chassis. The first number or letter designates the country of manufacture. The last five digits of the serial number are assigned sequentially and are unique to each instrument. Those manufactured in the United States have six unique digits. The country of manufacture is identified as follows:

B000000	Tektronix, Inc., Beaverton, Oregon, U.S.A.
HK00001	Hong Kong
100000	Tektronix Guernsey, Ltd., Channel Islands
200000	Tektronix United Kingdom, Ltd., London
300000	Sony/Tektronix, Japan
700000	Tektronix Holland, NV, Heerenveen, The Netherlands

Certificate of the Manufacturer/Importer

We hereby certify that the CFG250 FUNCTION GENERATOR AND ALL INSTALLED OPTIONS complies with the RF Interference Suppression requirements of Amtsbl.-Vfg 1046/1984.

The German Postal Service was notified that the equipment is being marketed.

The German Postal Service has the right to re-test the series and to verify that it complies.

TEKTRONIX

Bescheinigung des Herstellers/Importeurs

Hiermit wird bescheinigt, daß der/die/das CFG250 FUNCTION GENERATOR AND ALL INSTALLED OPTIONS in Übereinstimmung mit den Bestimmungen der Amtsblatt-Verfügung 1046/1984 funkentstört ist.

Der Deutschen Bundespost wurde das Inverkehrbringen dieses Gerätes angezeigt und die Berechtigung zur Überprüfung der Serie auf Einhalten der Bestimmungen eingeräumt.

TEKTRONIX

NOTICE to the user/operator:

The German Postal Service requires that Systems assembled by the operator/user of this instrument must also comply with Postal Regulation, Vfg. 1046/1984, Par. 2, Sect. 1.

HINWEIS für den Benutzer/Betreiber:

Die vom Betreiber zusammengestellte Anlage, innerhalb derer dies Gerät eingesetzt wird, muß ebenfalls den Voraussetzungen nach Par. 2, Ziff. 1 der Vfg. 1046/1984 genugen.

NOTICE to the user/operator:

The German Postal Service requires that this equipment, when used in a test setup, may only be operated if the requirements of Postal Regulation, Vfg. 1046/1984, Par. 2, Sect. 1.7.1 are complied with.

HINWEIS für den Benutzer/Betreiber:

Dies Gerät darf in Meßaufbauten nur betrieben werden, wenn die Voraussetzungen des Par. 2, Ziff. 1.7.1 der Vfg. 1046/1984 eingehalten werden.

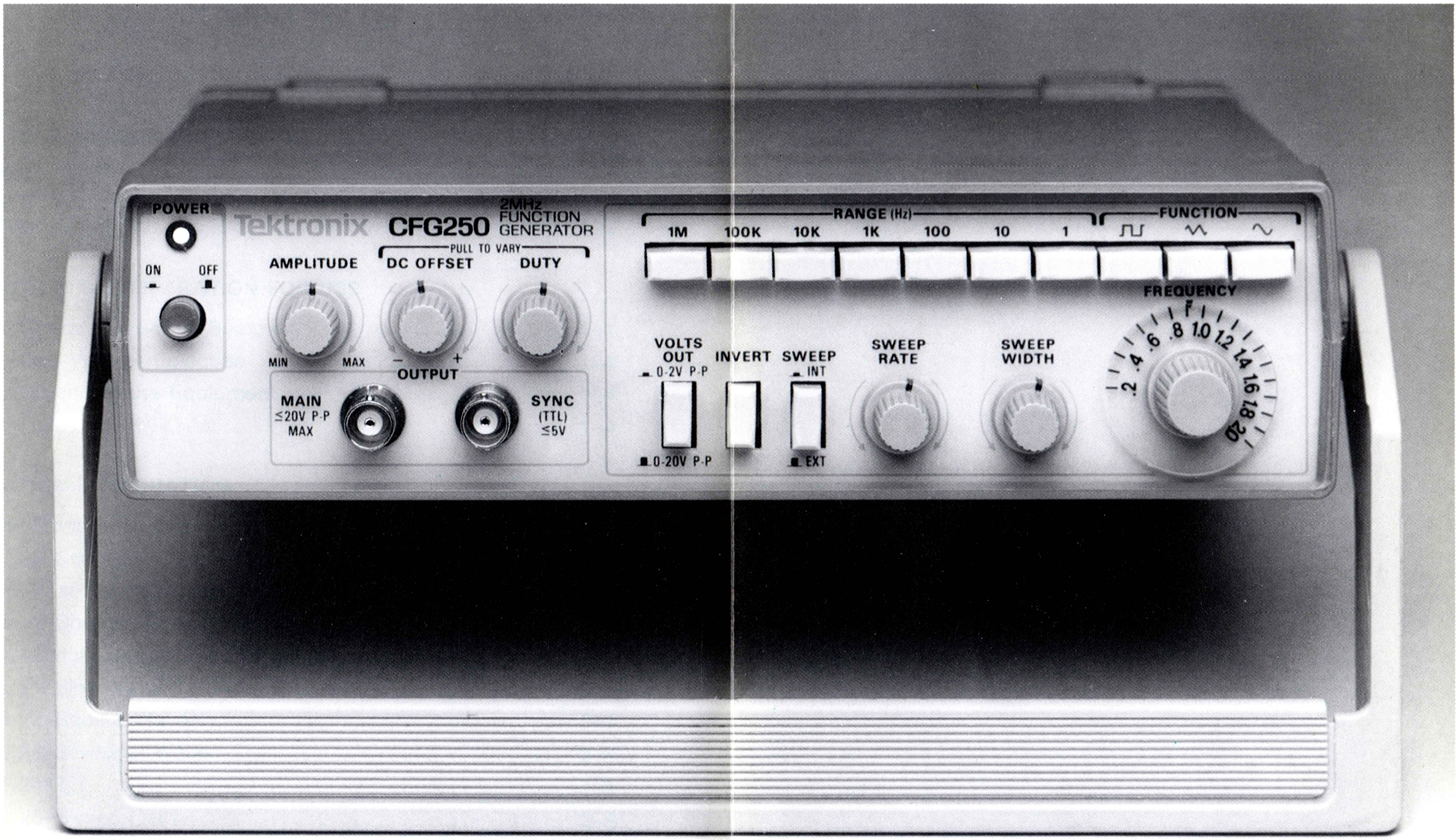
POWER
ON
OFF
Tektronix
CFG250
2MHz FUNCTION GENERATOR
PULL TO VARY
AMPLITUDE
DC OFFSET
DUTY
MIN
MAX
OUTPUT
MAIN
≤20V P-P
MAX
SYNC
(TTL)
≤5V
RANGE (Hz)
1M
100K
10K
1K
100
10
1
FUNCTION
FREQUENCY
VOLTS OUT
0-2V P-P
0-20V P-P
INVERT
SWEEP
INT
EXT
SWEEP RATE
SWEEP WIDTH

6738-06

CONTENTS

Page

List of Illustrations ii
List of Tables ii
The CFG250 2 MHz Function Generator,
a brief description iii

SECTION 1—PREPARATION FOR USE

1.0–Operator's Safety Summary 1–1
1.1–Line Voltage Selection 1–4
1.2–Grounding the Equipment 1–4
1.3–Fuses 1–4

SECTION 2—OPERATION

2.00–Front Panel Organization 2–1
2.05–Controls, Connectors, and Indicators 2–2
2.10–Rear Panel Organization 2–4
2.11–Controls Connectors, and Indicators 2–5
2.20–Functions and Applications 2–6
2.21–Sine Wave 2–6
2.22–Square Wave 2–7
2.23–Sawtooth Wave 2–8
2.24–TTL 2–9
2.25–Sweep Output 2–9
2.26–Voltage Controlled External Sweep Input 2–9

SECTION 3—SPECIFICATIONS

3.1–General Characteristics 3–1
3.2–Electrical Characteristics 3–3

Page

SECTION 4—OPERATOR MAINTENANCE

SECTION 5—BASIC THEORY OF OPERATION

SECTION 6—GLOSSARY OF TERMS

LIST OF ILLUSTRATIONS

Figure 2–1. Front Panel 2–1
Figure 2–2. Rear Panel 2–4
Figure 2–3. Output Test Configuration 2–7
Figure 5–1. Circuit Block Diagram 5–1

LIST OF TABLES

Table 2–1. Waveform chart for symmetry and invert controls 2–3

THE CFG250 2 MHz FUNCTION GENERATOR

The TEKTRONIX CFG250 2 MHz FUNCTION GENERATOR produces sine, square and sawtooth waves and TTL signals. Its applications include testing and calibration of audio, ultrasonic, and servo systems. The CFG250's sweep function can be internally controlled or controlled with an external DC level. Duty cycle, DC offset, sweep rate, sweep width and amplitude are controlled by the operator. The CFG250 has an output frequency range of 0.2 Hz to 2 MHz.

The TEKTRONIX CFG250 has a locking, multi-position handle that folds under the instrument to allow stacking with other instruments of the same series. The instrument is delivered with a power cord and an Operator's manual.

Should you need more information about your CFG250 2 MHz Function Generator or other Tektronix products: contact the nearest Tektronix Sales Office or Distributor, consult the Tektronix product catalog, or in the U.S., call the Tektronix National Marketing Center.

PREPARATION FOR USE

1

OPERATOR'S SAFETY SUMMARY

The general safety information in this part of the summary is for both operating and service personnel. Specific warnings and cautions will be found throughout the manual where they apply and do not appear in this summary.

Terms Used In This Manual

CAUTION statements identify conditions or practices that could result in damage to the equipment or other property.

WARNING statements identify conditions or practices that could result in personal injury or loss of life.

Terms As Marked on Equipment

CAUTION indicates a personal injury hazard that is not immediately accessible as one reads the markings, or a hazard to property, including the equipment itself.

DANGER indicates a personal injury hazard immediately accessible as one reads the marking.

Symbols In This Manual

This symbol indicates where applicable cautionary or other information is to be found.

Symbols As Marked on Equipment

DANGER – High Voltage

Protective ground (earth) terminal.

ATTENTION – Refer to Manual.

Chassis ground.

Power Source

This product is intended to operate from a power source that does not apply more than 250 volts rms between the supply conductors or between either supply conductor and ground. A protective ground connection by way of the grounding conductor in the power cord is essential for safe operation.

Grounding the Product

This product is grounded through the grounding conductor of the power cord. To avoid electrical shock, plug the power cord into a properly wired receptacle before connecting to the product input or output terminals. A protective ground connection by way of the grounding conductor in the power cord is essential for safe operation.

Danger Arising From Loss of Ground

Upon loss of the protective-ground connection, all accessible conductive parts (including knobs and controls that may appear to be insulating) can render an electric shock.

Use the Proper Power Cord

Use only the power cord and connector specified for your product.

Use only a power cord that is in good condition.

For detailed information on power cords and connectors see Figure 2–2.

Use the Proper Fuse

To avoid fire hazard, use only a fuse of the correct voltage rating and current rating as specified in the parts list for your product.

Do Not Operate in Explosive Atmospheres

To avoid explosion, do not operate this product in an explosive atmosphere.

Do Not Remove Covers or Panels

To avoid personal injury, do not remove the product covers or panels. Do not operate the product without the covers and panels properly installed.

1.1–Line Voltage Selection

This product is intended to operate from a power source that does not supply more than 250 V rms between the supply conductors or between either supply conductor and ground. Normal USA voltage is 120 V AC. For line voltage selection setting, see Figure 2–2.

1.2–Grounding the Equipment

A protective ground connection, the third wire in the power cord, is necessary for safe operation. To avoid electrical shock, plug the power cord into a properly wired receptacle before making any connections to the equipment input or output terminals. Do not remove the ground lug from the power cord for any reason. Use only the power cord and connector specified for this equipment.

1.3–Fuses

To avoid fire hazard, use only a fuse of the specified type, voltage rating and current rating for this equipment. (See 2.11 Controls, Connectors, and Indicators.)

SECTION 2

OPERATION

2

2

2.00–Front Panel Organization

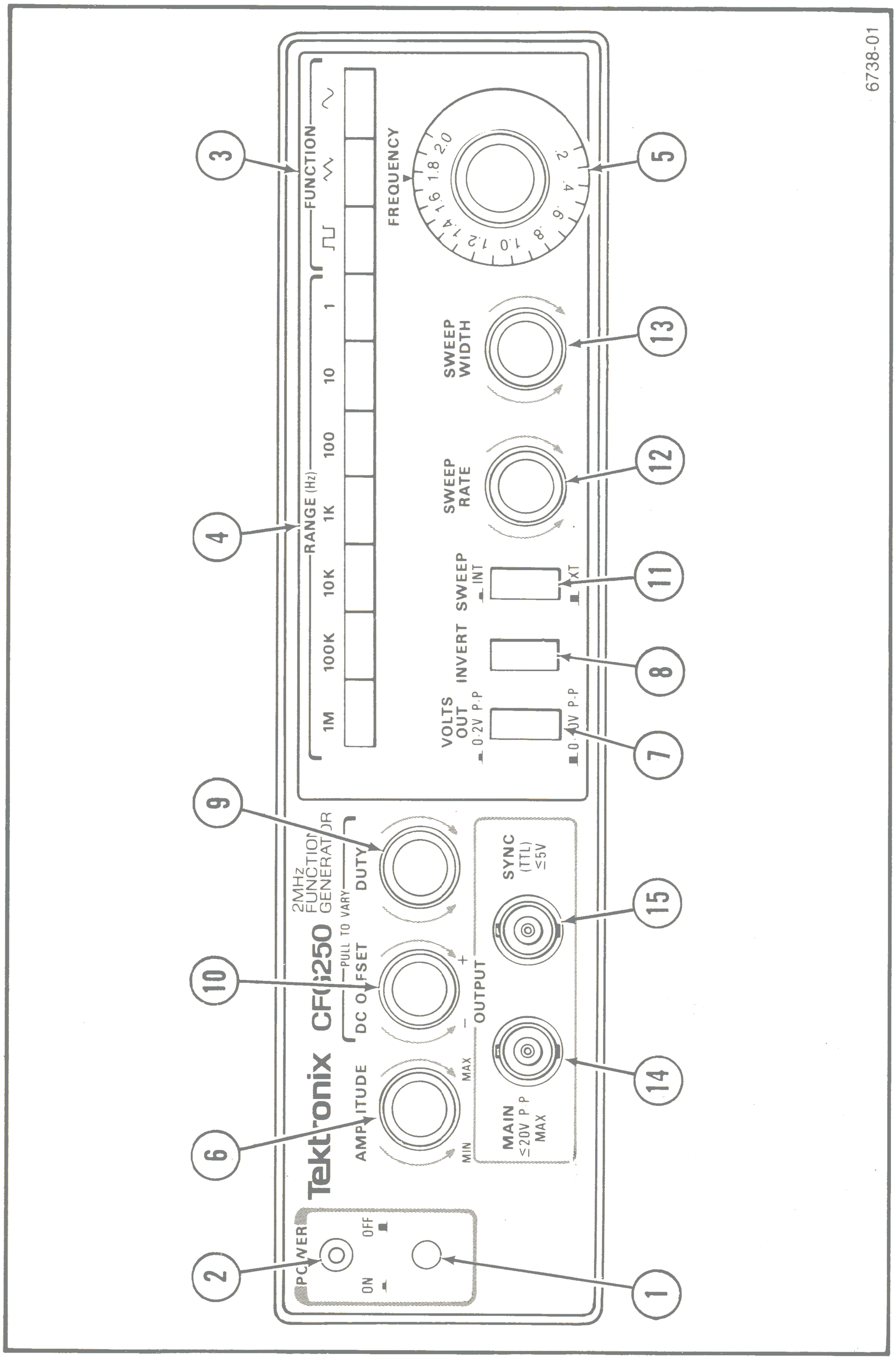

Figure 2–1. Front Panel.

2.05–Controls, Connectors, and Indicators

(1) POWER button – Push in to turn CFG250 on. A second push turns the generator off.

(2) POWER on light – Indicates a power on condition.

(3) FUNCTION buttons – The sine, square or sawtooth buttons determine the type of signal provided at the MAIN output connector.

(4) RANGE (Hz) buttons – These buttons determine the frequency range of the signal at the MAIN output connector.

(5) FREQUENCY control – This variable control determines the frequency of the signal at the MAIN output connector within the range set by the RANGE buttons.

(6) AMPLITUDE control – This variable control, depending on the position of the VOLTS OUT button, determines the level of the signal at the MAIN output connector.

(7) VOLTS OUT range button – Push in for AMPLITUDE control range of 0 to 2 Vp–p, open circuit, or 0 to 1 Vp–p into a 50 Ω load. Set to the out position for an AMPLITUDE control range of 0 to 20 Vp–p, in an open circuit, or 0 to 10 Vp–p to a 50 Ω load.

(8) INVERT button – Pushing this button in causes the signal at the MAIN output connector to be inverted. When the DUTY control is being used, the invert switch determines which half of the output waveform will be affected. Table 2–1 shows that relationship.

(9) DUTY control – Pull this control out to activate. At maximum ccw the output signal, including TTL, will be symmetrical. Turning the control cw will change the period of half the waveform as determined by the INVERT button. The period of the unaffected half of the waveform will still be determined by the FREQUENCY multiplier and RANGE buttons. When the control is pushed in, the signal outputs are symmetrical at all control settings.

Table 2-1
Waveform chart for symmetry and invert controls

	DUTY CCW		DUTY CW	
	Invert Out	Invert In	Invert Out	Invert In
Square				
Triangle				
Sine				
TTL				

6738-03

(10) DC OFFSET – Pull this control out to activate. The DC OFFSET control sets the DC level and polarity of the signal at the MAIN output. When the control is pressed in the signal is centered at zero Vdc.

(11) SWEEP button – Push in for internal sweep. This button activates the sweep rate and sweep width controls. When the button is set out the CFG250 will accept signals from its EXTERNAL SWEEP input connector on the rear panel.

(12) SWEEP RATE – This control adjusts the rate of the internal sweep generator and the repetition rate of the burst gate.

(13) SWEEP WIDTH – This control adjusts the amplitude of the sweep.

(14) MAIN output connector – BNC output connector for sine wave, square wave and sawtooth wave signals.

CAUTION

The outside (ground) of the MAIN and SYNC output connectors are connected through the equipment to the power source ground. Check the grounding system of the receiving equipment before connecting the CFG250.

(15) SYNC (TTL) output connector – BNC output connector for TTL signals.

2.10–Rear Panel Organization

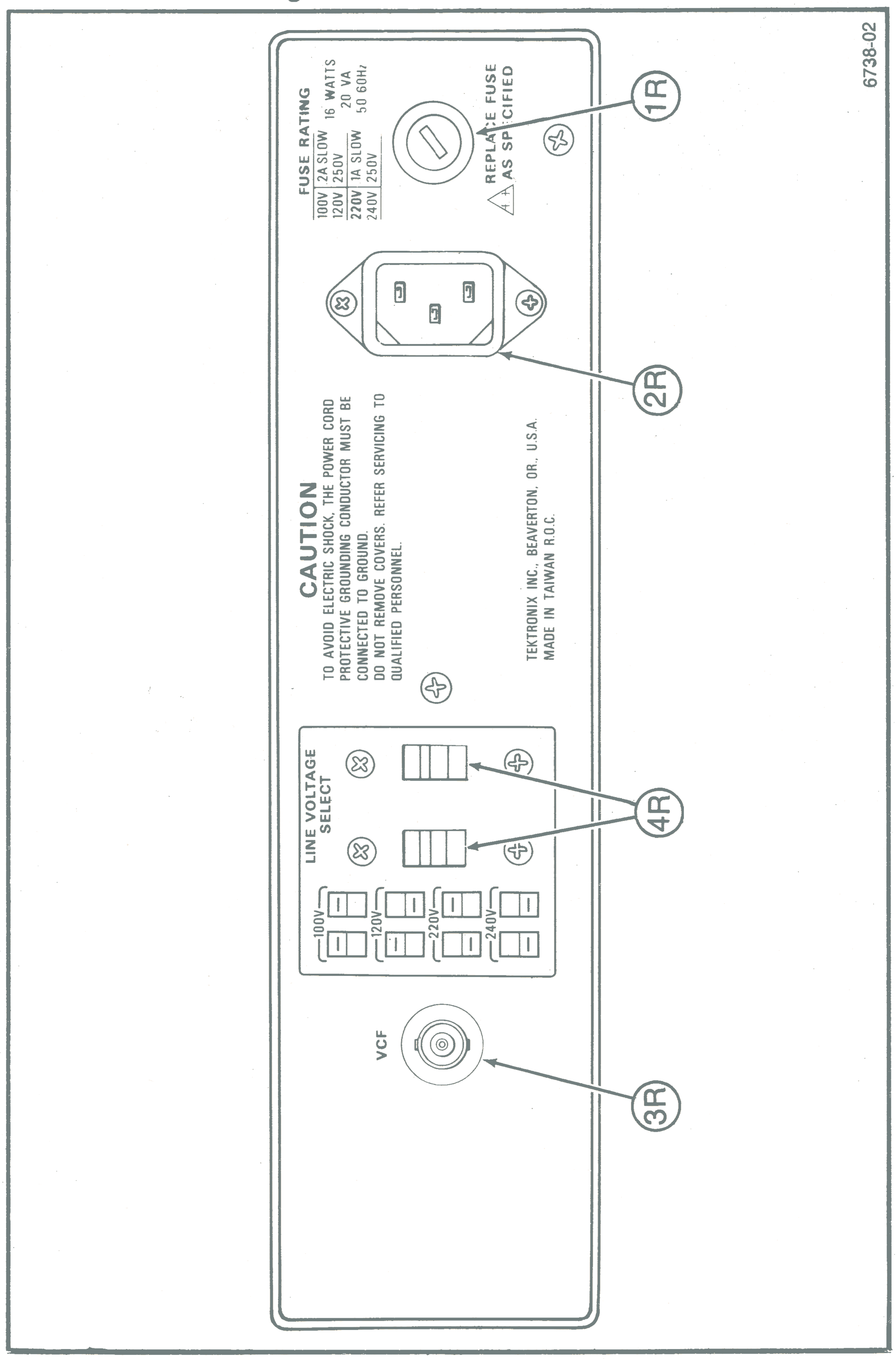

Figure 2–2. Rear Panel.

2.11–Controls, Connectors, Indicators

(1R) LINE FUSE – Provides protection for equipment malfunction or overload. (MDL 0.2 A, 250V slow–blow for 100–120 V range or MDL 0.1 A, 250 V slow–blow for 220–240 V range).

(2R) POWER INPUT – Input connector for power cord – safety coded.

(3R) EXTERNAL SWEEP input connector – Input BNC connector for voltage–controlled sweep. Signals applied to this connector will control the output frequency when the SWEEP button is set to the out position. An input of 0 to +10V DC sweeps the signal at the MAIN output down two decades (100:1). The total sweep range is also dependent on the base frequency and the desired sweep direction.

CAUTION

The outside (ground) of the EXTERNAL SWEEP input connector is connected through the equipment to the power source ground. Check the grounding system of the input equipment before connecting the CFG250.

(4R) LINE VOLTAGE SELECTOR – These selectors connect the internal wiring for various line voltages.

CAUTION

Observe and set LINE VOLTAGE SELECTORs for the correct voltage level before operating the equipment.

2.20–Functions and Applications

2.21–Sine Wave

A sine wave output is obtained from the MAIN output connector when the sine wave FUNCTION button is pushed in and one of the frequency RANGE buttons is pushed in. The frequency of the wave is set by the combination of the RANGE button and the variable FREQUENCY control. The output may be checked with an oscilloscope such as the Tektronix 2225 or equivalent. Proceed as follows:

1. To operate CFG250 for sine wave output, the controls should be set as follows:

CONTROL	SETTING
POWER button	On (pressed in)
RANGE (Hz) button	1 KHz button pressed in
FREQUENCY Dial	1.0
DUTY control	In or fully ccw
DC OFFSET control	In or centered
AMPLITUDE control	Centered
INVERT button	Out
VOLTS OUT button	Out (0–20 position)
FUNCTION button	Sine wave button pressed in
SWEEP button	Out
LINE VOLTAGE SELECTORs	Check power outlet for power line range (90–132 or 198–250).

The cable connection is shown in Figure 2–3.

2. Set the oscilloscope VOLTS/DIV to 2 V, the SEC/DIV to 0.2 ms and the rest of the controls to normal operating position.

3. The output frequency can be calculated by taking the reciprocal of the waveform period.

4. The output can be set precisely with the Tektronix CFC250 Frequency Counter by connecting the output of the

CFG250 directly to the counter, or by using a BNC T connector at the output of the generator and connecting to the scope and counter at the same time.

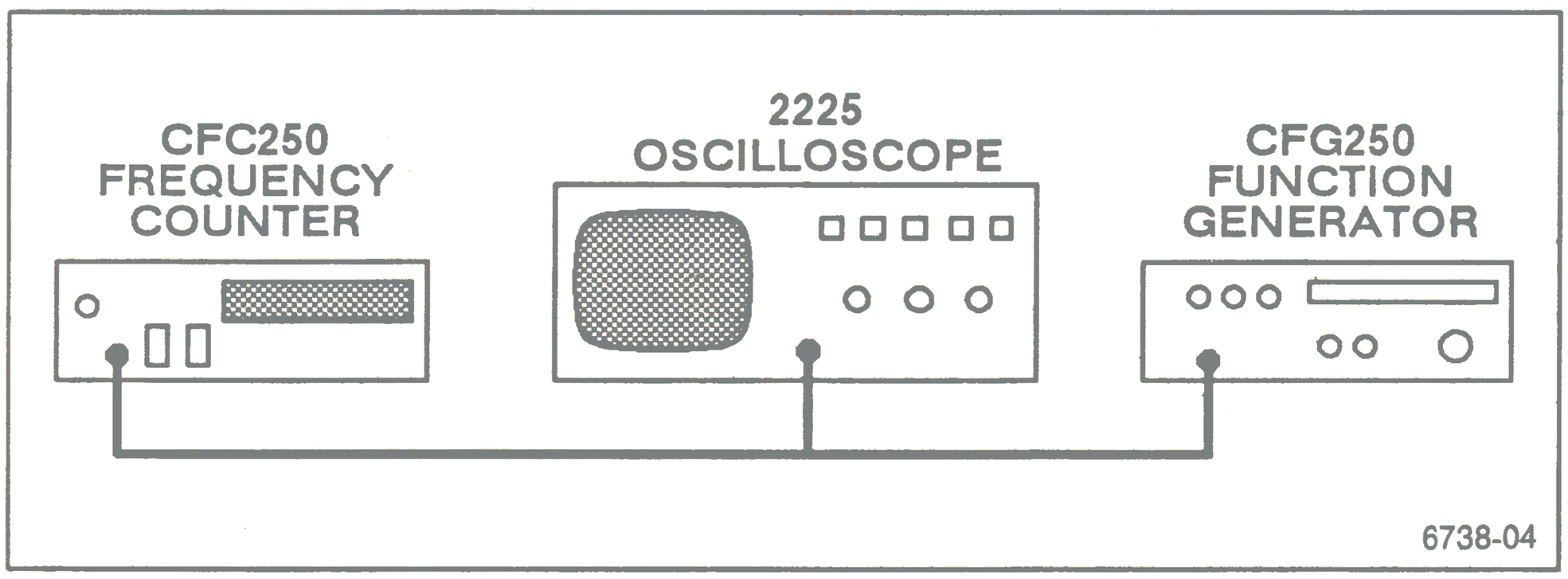

Figure 2–3. Output Test Configuration.

When you are familiar with the setup for a sine wave at the example frequency, change the frequency range and rotate the frequency dial, observing the scope or counter display. Read the voltage output of the generator by connecting the Tektronix CDM250 multimeter set on AC Volts function. Refer to the CDM250 Operator's Manual for instructions. You will be able to read the rms value of the sine wave and compare it to the p–p sine wave value you observed on the scope. The rms value should read 0.3535 times the p–p value on the scope. Sine wave signals are used to check audio and radio frequency circuits.

The CFG250 high–end frequencies may be used to simulate the carrier signal for the AM broadcast band. With a capacitor in series with the center of the MAIN output connector, audio signals may be injected into most audio equipment.

2.22–Square Wave

A square–wave output is available at the MAIN output connector when the square wave FUNCTION button and one of the RANGE (Hz) buttons are pushed in. The frequency of the wave is set by the combination of the RANGE (Hz) button pushed in and the variable FREQUENCY control.

The output may be checked with an oscilloscope such as the Tektronix 2225 or equivalent. The cable connection is shown in Figure 2–3. The output frequency can be calculated by taking the reciprocal of the waveform period. The output can be precisely set with the Tektronix CFC250 Frequency Counter by connecting the output of the CFG250 directly to the counter, or by using a BNC T connector at the output of the generator and connecting to the scope and counter at the same time.

To set the instrument for square wave operation, the controls should be set the same as for obtaining the sine wave output, except the square wave FUNCTION button must be pushed in. You will not be able to get an accurate rms reading for a square wave on the Tektronix CDM250, or most other digital or analog meters, because they are calibrated for sine wave rms value.

The square wave output may be used to simulate pulse signals. The square wave is often used to test and calibrate timing circuits.

2.23–Sawtooth Wave

A sawtooth (triangle) wave output is available at the MAIN connector when the sawtooth wave FUNCTION button and one of the frequency RANGE (Hz) buttons are pressed in. The frequency of the wave is set by the combination of the RANGE (Hz) button pushed in and the variable frequency control.

The output may be checked with an oscilloscope such as the Tektronix 2205 or equivalent. The cable connection is shown in Figure 2–3. The output frequency can be calculated by taking the reciprocal of the waveform period. The output can be precisely set with the Tektronix CFC250 Frequency Counter by connecting the output of the CFG250 directly to the counter, or by using a BNC T connector at the output of the generator and connecting to the scope and counter at the same time.

To set the instrument for sawtooth wave operation, the controls should be set the same as for obtaining the sine wave output, except the sawtooth wave FUNCTION button must be pushed in.

You will not be able to get an accurate rms reading for the sawtooth wave on the Tektronix CDM250, or most other digital or analog meters, because they are calibrated for sine wave rms value.

One of the most common uses for the sawtooth wave is for an external sweep control for an oscilloscope. It is also used to calibrate the symmetry circuits of some equipment.

2.24–TTL

A Transistor–Transistor–Logic (TTL) signal is available from the SYNC connector. The pulse rate is controlled by the RANGE (Hz) buttons and the FREQUENCY dial. The symmetry of this wave form may be controlled with the DUTY control. The TTL signal is also available in the sweep mode. The amplitude of the TTL signal is fixed at 2 Vp–p (square wave).

The TTL pulse is used to inject signals into logic circuits for testing purposes.

2.25–Sweep output

All of the outputs from the function generator may be used in the sweep mode. These outputs are used in conjunction with other test equipment to produce a frequency modulated signal. Using a sweep signal is a common method of tuning circuits and checking the bandwidth of audio and radio frequency circuits.

2.26–Voltage Controlled External Sweep Input

This feature allows the sweep generator to be controlled by an external voltage source. When this mode is in operation the SWEEP button is out, the SWEEP RATE and SWEEP WIDTH controls are inoperative. The dc voltage applied to the input determines the sweep characteristics of the signal at the MAIN or SYNC (TTL) connectors.

SPECIFICATIONS

3.1–General Characteristics

OPERATIONAL

Characteristics after 1 hr. warmup time at 23°C ±5°C, 70% RH.

Output Square wave, sine wave, sawtooth wave, TTL pulse, and sweep functions for all outputs.

Frequency Ranges

Range Setting	Variable
1	0.2 to 2.0 Hz
10	2 to 20 Hz
100	20 to 200 Hz
1K	0.2 k to 2.0 kHz
10K	2 k to 20 kHz
100K	20 kHz to 200 kHz
1M	0.2 M to 2.0 MHz

Frequency Multiplier Variable 0.2 to 2.0 times the selected frequency Range.

Frequency Accuracy ±5% of full scale.

SWEEP

Internal Linear.

Sweep Rate 0.5 Hz (2 sec period) to 50 Hz (20 millisecond period), continuously variable.

Sweep Width Variable from 1:1 to 100:1.

Sine Wave Distortion < 1% from 10 Hz to 100 KHz.

Sawtooth Linearity	20 Hz to 200 kHz ≥99%. 200 kHz to 2 MHz ≥97%.
Square Response	≤100 ns rise/fall time maximum output into 50 Ω load.
TTL Output	
Rise/Fall Time	< 25 ns (20 TTL loads).
Main Output Amplitude	Two ranges: 100 mV to 20 Vp–p (open circuit) and 50 mV to 10 Vp–p (50 Ω load) and 10 mV to 2 Vp–p (open circuit) and 5 mV to 1 Vp–p (50 Ω load).
Impedance	50 Ω ±10%.
DC Offset	< –10 V to > +10V (open circuit) and < –5 V to > +5 V (into 50 Ω load).
Duty Cycle	5 to 1 minimum duty cycle change (50% at max CCW or Cal Position).
Input	Voltage control for sweep frequency.
Input Impedance	10 kΩ ±10%.
Voltage Controlled Sweep Range	100:1 minimum for 0 to +10 VDC input.
PHYSICAL	
Width	240 mm (9.46 in).
Height	64 mm (2.53 in).
Depth	190 mm (7.49 in).
Weight	1.7 kg (3.7 lb).

ENVIRONMENTAL

Storage Temperature	–10°C to 60°C, 80% RH.
Operating Temp.	10°C to 40°C, 75% RH.

3.2–Electrical Characteristics

Line Voltage Range	90 to 110, 108 to 132, 198 to 242, and 216 to 250 Vac at 50–60 Hz.
Power Consumption	20 VA , 16 W.

SECTION 4

OPERATOR MAINTENANCE

4

Electronic maintenance on the TEKTRONIX CFG250 must be performed by a trained technician. However, any operator can perform some basic and routine maintenance. The CFG250 will give some indications of problems to aid the operator.

INDICATION: Power light not on, POWER button in, equipment plugged into outlet.

SOLUTION: Check Line Fuse.

CAUTION

Unplug power cord and disconnect signal input or output cables from circuits under test before checking or replacing fuse.

INDICATION: Fuse ok.

SOLUTION: Check power outlet for proper voltage.

INDICATION: Voltage ok.

SOLUTION: Check power cord continuity.

CAUTION

Be sure power cord is disconnected from power source and equipment.

INDICATION: POWER light on, no output from MAIN connector.

SOLUTION: Check that RANGE (Hz) and function buttons are set correctly.

–Check connecting cable for continuity.

CAUTION

Disconnect test cable from circuit being tested before checking continuity.

INDICATION: Distorted output at MAIN or SYNC Connector.

SOLUTION: Set DUTY, DC OFFSET, SWEEP RATE and SWEEP WIDTH controls to off position.

BASIC THEORY OF OPERATION

The Tektronix CFG250 2 MHz Function Generator consists of a voltage controlled oscillator (VCO) made up of integrated circuits U1, U2, U3, U4 and U5; and transistors Q3, Q4, Q5, Q7 and Q8. The output from the VCO is a ramp waveform produced by a combination of charge and discharge current through Q3 and Q4 as determined by one of the range capacitors.

This current is applied to U6, Q6 and Q7 to produce a buffered TTL output and a square wave output. The triangle (sawtooth) wave is also applied to sine wave converter U7, and is shaped to produce a sinusoidal output. The triangle, square, and sine wave signals are then applied to a power amplifier for output to a load.

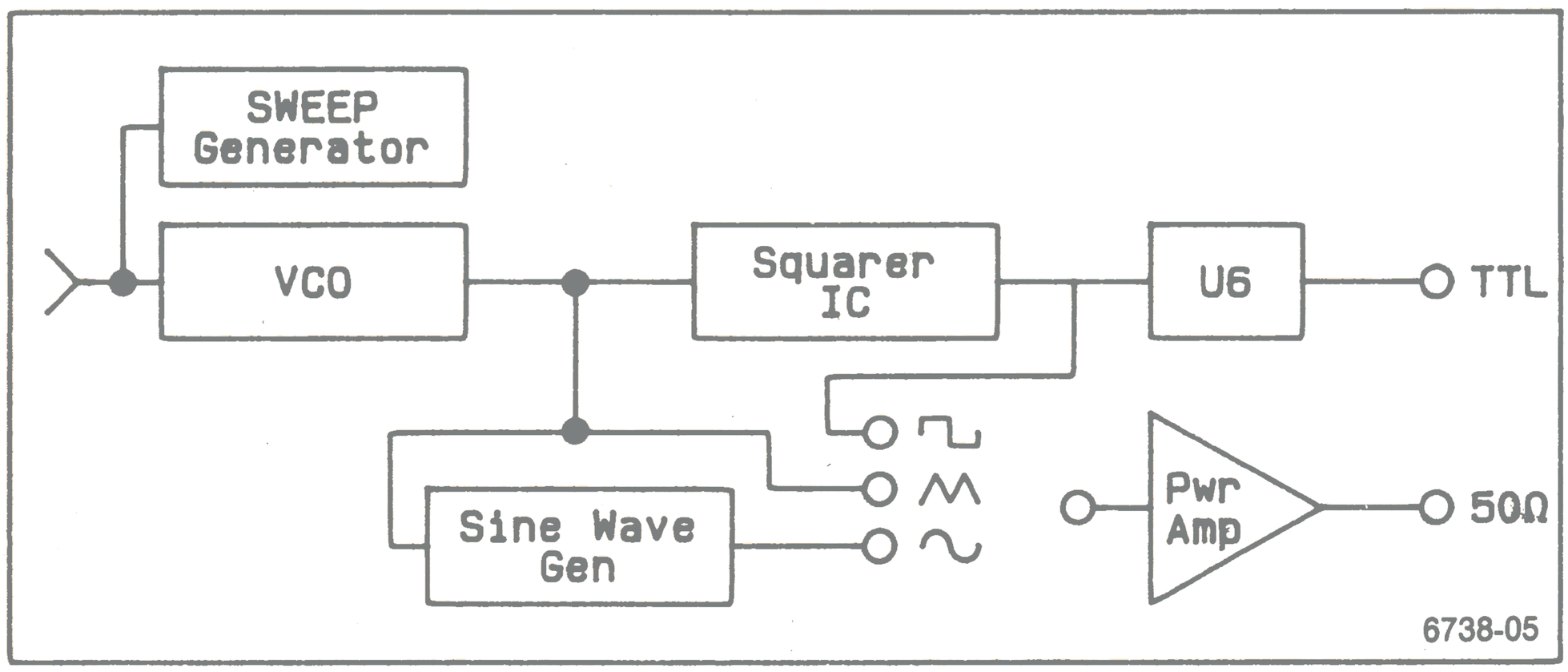

Figure 5–1. Circuit Block Diagram.

GLOSSARY OF TERMS

Alternation: A complete reversal of direction, such as a change from a positive direction to negative and back again.

Ampere (A): The basic unit of current.

Anode: The diode terminal that responds to a relatively positive applied voltage by conducting.

Attenuator: A device or circuit that lowers the voltage or power level of a signal.

Audio: Generally the frequency range of 20 Hz to 20 kHz, but may extend lower or higher.

Calibrate: To adjust a measuring instrument so that it will measure accurately on a particular scale or an output instrument for an accurate output.

Cathode: The diode terminal that responds to a relatively negative applied voltage by conducting.

Cathode-ray tube (crt): The picture tube in an oscilloscope.

Clock-wise (cw): Rotate to the right.

Counter-clock-wise (ccw): Rotate to the left.

Current (I): The motion of charges in one general direction through a conductor.

Cycle (Hz): One complete alternation of direction, as in alternating current.

Deflection: The amount of movement of an indicating device, such as a meter needle or scope trace, due to some change in voltage, current or resistance.

Diode: A two-electrode semiconductor device that uses the rectifying property of a p-n junction.

Farad (F): The basic unit of capacitance.

Henry (h): The basic unit of inductance.

Impedance (Z): The total opposition to current in a circuit, composed of resistance and reactance (inductive and/or capacitive.

Isolation Voltage: The maximum voltage that can be applied to two terminals without causing a fault condition.

Kilo- (k): Prefix meaning 1000 (10^3).

Load: The impedance that a circuit, or electrical load, presents to output of the reference instrument.

Loading Error: The error introduced by the impedance of a meter when voltage or current is measured.

Meter Sensitivity: The reciprocal of the full-scale current of an ammeter when it is used as a voltmeter.

Mega- (M): Prefix meaning 1,000,000 (10^6).

Milli- (m): Prefix meaning one thousandth (.001) (10^{-3}).

Micro- (μ): Prefix meaning one millionth (.000001) (10^{-6}).

Ohm (Ω): The basic unit of resistance.

Pico- (p): Prefix meaning (.000000000001), (10^{-12}).

Peak-to-peak Voltage (Vp-p): The voltage between the positive and negative peaks of a sine wave.

Peak Voltage (Vp): The voltage between the zero voltage reference and the peak of the sine wave shape of an alternating voltage.

Polarity: The positive or negative direction of voltage or current.

Port: The signal input or output connector on electronic equipment.

Power (P): The rate of using energy.

Resistance (R): Opposition to current, expressed in Ohms.

Root-mean-square (rms): The measure of effective value of a sine wave voltage, current or power (0.707 x Value-peak).

Sine Wave: The graphic plot of voltage against time of the normal ac wave form, the most common signal form.

Volt (V): The unit of potential difference. One volt is the amount of voltage needed to cause one Ampere of current to pass through one Ohm of resistance.

Watt (W): The unit of power. One Watt is the amount of work done in moving one Ampere of current through one Ohm of resistance with an applied voltage of one Volt.

MANUAL CHANGE INFORMATION

At Tektronix, we continually strive to keep up with the latest developments by adding improvements to our products as soon as they are developed and tested.

Sometimes, due to printing and shipping requirements, we can't get these changes immediately into printed manuals. Hence, your manual may contain new change information on the following pages.

A single change may affect several sections. Since the change information sheets are carried in the manual until all changes are permanently entered, some duplication may occur. If no such change pages appear following this page, your manual is correct as printed.

For further information, contact:

U.S.A.

Tektronix, Inc.
P. 0. Box 500
Beaverton, Oregon 97077
Phone: (503) 627-7111
(800) 835-9433
Telex: 151754
TWX: (910) 467-8708

Africa, Asia, Australia, Canada, Central & South America

Tektronix, Inc.
U.S. Export Sales
P.O. Box 500 D/S 73-323
Beaverton, Oregon 97077, U.S.A.
Phone: (503) 627-1619
Telex: 4742110 TEK EXP
Fax: (503) 627-6905

Eastern Europe, Near and Middle East

Tektronix Ges.m.b.H.
Doerenkampgasse 7
A-1100 Vienna, Austria
Phone: 43 (222) 68-66-02-0
Telex: 111481 TEK A
Fax: 43 (222) 68-66-00

Tektronix sales and service offices around the world:

Algeria, Argentina, Australia, Austria, Bahrain, Bangladesh, Belgium, Bolivia, Brazil, Bulgaria, Canada, Chile, People's Republic of China, Colombia, Costa Rica, Cyprus, Czechoslovakia, Denmark, Equador, Egypt, Finland, France, Federal Republic of Germany, Ghana, Greece, Hong Kong, Iceland, India, Indonesia, Ireland, Israel, Italy, Ivory Coast, Japan, Jordan, South Korea, Kuwait, Lebanon, Malaysia, Mauritius, Mexico, The Netherlands, New Zealand, Nigeria, Norway, Oman, Pakistan, Panama, Peru, Philippines, Poland, Portugal, Qatar, Saudi Arabia, Senegal, Singapore, Republic of South Africa, Spain, Sri Lanka, Sweden, Switzerland, Syria, Taiwan, Thailand, Tunisia, Turkey, United Arab Emirates, United Kingdom, Uruguay, USSR, Venezuela, Yugoslavia, Zimbabwe.

Copyright© 1987, Tektronix, Inc. All rights reserved. Printed in U.S.A. Tektronix products are covered by U.S. and foreign patents, issued and pending. Information in this publication supersedes that in all previously published material. Specification and price change privileges reserved. TEKTRONIX and TEK are registered trademarks. For further information, contact: Tektronix, Inc., P.0. Box 500, Beaverton, OR 97077. Phone (503) 627-7111; TWX: (910) 467-8708; TLX: 151754; Cable: TEKWSGT. Subsidiaries and distributors worldwide.

Tektronix®
COMMITTED TO EXCELLENCE

91-25049-1